LDK® Pedestal Base Pillow Blocks

UCPH Standard duty,Wider inner ring bearing,Setscrew locking



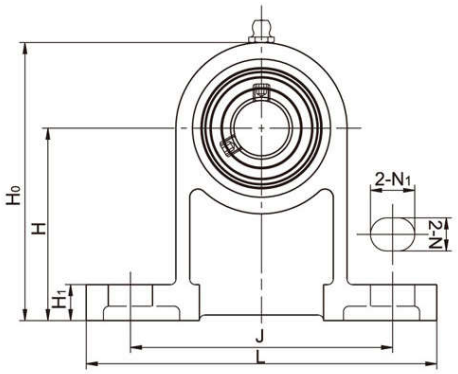

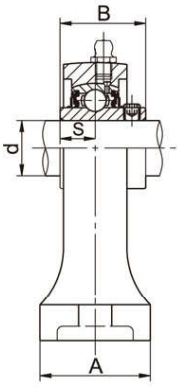

Unit No.	Shaft Dia d		Dimensions(mm)										Bolt Size (mm)	Weight (kg)
	(in)	(mm)	H	L	J	A	N	N1	H1	H0	B	S		
UCPH201 UCPH201-8	 1/2	12	70	127	95	40	13	19	15	101	31	12.7	M10	0.96
UCPH202 UCPH202-9 UCPH202-10	 9/16 5/8	15	70	127	95	40	13	19	15	101	31	12.7	M10	0.96
UCPH203 UCPH203-11	 11/16	17	70	127	95	40	13	19	15	101	31	12.7	M10	0.96
UCPH204 UCPH204-12	 3/4	20	70	127	95	40	13	19	15	101	31	12.7	M10	0.96
UCPH205 UCPH205-14 UCPH205-15 UCPH205-16	 7/8 15/16 1	25	80	140	105	50	13	19	16	114	34.1	14.3	M10	1.20
UCPH206 UCPH206-17 UCPH206-18 UCPH206-19 UCPH206-20	 1-1/16 1-1/8 1-3/16 1-1/4	30	90	165	121	50	17	21	18	130	38.1	15.9	M14	1.60
UCPH207 UCPH207-20 UCPH207-21 UCPH207-22 UCPH207-23	 1-1/4 1-5/16 1-3/8 1-7/16	35	95	167	127	60	17	21	19	140	42.9	17.5	M14	2.10
UCPH208 UCPH208-24 UCPH208-25	 1-1/2 1-9/16	40	100	178	137	70	17	21	20	150	49.2	19.0	M14	2.70
UCPH209 UCPH209-26 UCPH209-27 UCPH209-28	 1-5/8 1-11/16 1-3/4	45	105	190	146	70	17	21	20	158	49.2	19.0	M14	3.10
UCPH210 UCPH210-30 UCPH210-31 UCPH210-32	 1-7/8 1-15/16 2	50	110	206	159	70	20	23	22	165	51.6	19.0	M16	3.50
UCPH211 UCPH211-32 UCPH211-34 UCPH211-35	 2 2-1/8 2-3/16	55	120	219	171	75	20	23	23	181	55.6	22.2	M16	4.07
UCPH212 UCPH212-36 UCPH212-38 UCPH212-39	 2-1/4 2-3/8 2-7/16	60	130	235	186	85	20	23	24	197	65.1	25.4	M16	6.31

http://www.ldk-bearings.com